GOLDENSTAR

2 LITER PREASSURE TANK

GOL 2607

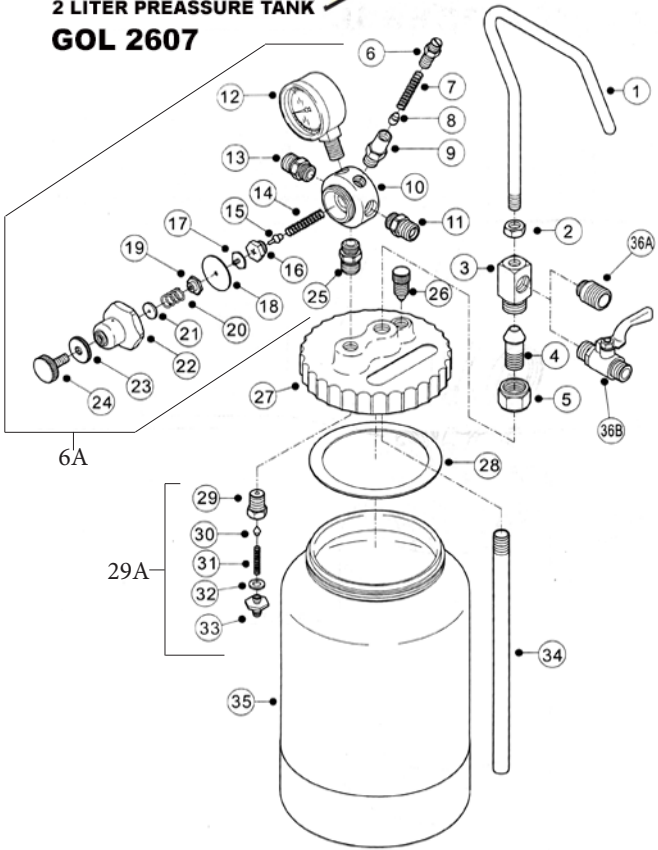

BREAKDOWN

Item No	Description	Item No	Description
1.	Hook	23.	Adjusting Nut
2.	Nut	24.	Adjusting Screw
3.	Outlet Fitting	25.	Screw
4.	Ceuterpost	26.	Air Release Valve
5.	Center Post Nut	27.	Cover
6.	Adjusting Scrwq	28.	Gasker
6A.	Set No From 6 to 25	29.	Screw
7.	Spring	29A.	Set No From 29 to 33
8.	Ball	30.	Stopper
9.	Safety Valve Body	31.	Spring
10.	Air Housing	32.	Washer
11.	Air Outlet	33.	Screw
12.	Airpressure Gauge	34.	Tube
13.	Air Inlet	35.	Cup
14.	Spring	36A.	Paint Outlet Screw
15.	Valve Stem	36B.	Lock
16.	Valve Screw		
17.	Screw		
18.	Washer		
19.	Screw		
20.	Spring		
21.	Washer		
22.	Lock Screw		